DTC	C1246/46	Master Cylinder Pressure Sensor Malfunction

DTC	C1281/81	Master Cylinder Pressure Sensor Output Malfunction (Test Mode DTC)

DESCRIPTION

The master cylinder pressure sensor is connected to the skid control ECU in the actuator.
DTC C1281/81 is output only in the test mode (SIGNAL CHECK).

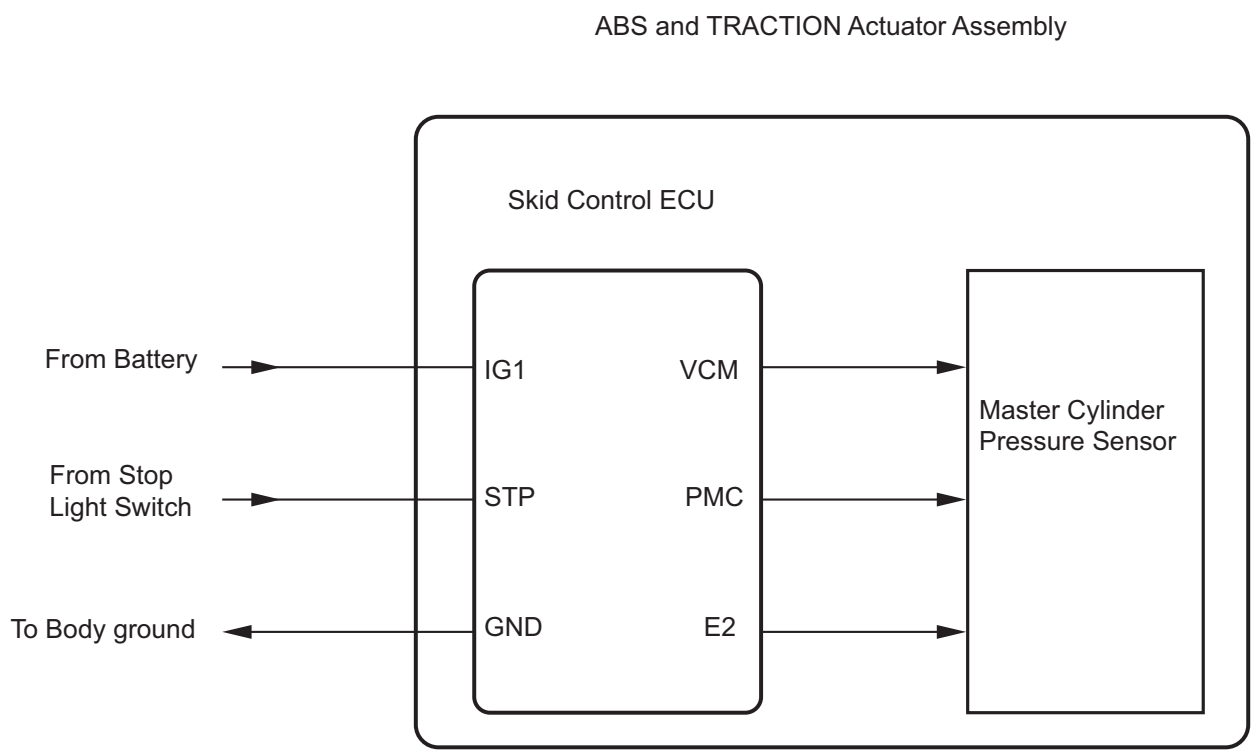

VCM: Power Supply for Master Cylinder Pressure Sensor

PMC: Master Cylinder Pressure Sensor Input

E2: Master Cylinder Pressure Sensor Ground

N

C106656E04

DTC No.	DTC Detecting Condition	Trouble Area
C1246/46	When any of the following (a to e) is detected: (a) All of the following conditions continue for at least 30 seconds. * Vehicle speed is more than 4 mph (7 km/h). * PMC terminal voltage does not change by more than 0.05 V once it exceeds 0.86 V. (b) PMC terminal receives interference at least 7 times within 5 sec. (c) All of the following conditions continue for at least 5 seconds. * Stop light switch is OFF. * PMC terminal voltage is more than 0.86 V or less than 0.3 V. (d) All of the following conditions continue for at least 1.2 seconds. * IG1 terminal voltage is between 9.5 and 17.2 V. * VCM terminal voltage is not within 4.4 and 5.6 V. (e) All of the following conditions continue for at least 1.2 seconds. * VCM terminal voltage is between 4.4 and 5.6 V. * PMC terminal voltage is not within 0.14 and 4.85 V.	• Master cylinder pressure sensor • Master cylinder pressure sensor circuit

INSPECTION PROCEDURE

NOTICE:

When replacing the ABS and TRACTION actuator assembly, perform zero point calibration (See page BC-80).

1 READ VALUE OF INTELLIGENT TESTER (MASTER CYLINDER PRESSURE SENSOR)

(a) Connect the intelligent tester to the DLC3.
(b) Start the engine.
(c) Select the DATA LIST mode on the intelligent tester.

Item	Measurement Item / Range (Display)	Normal Condition
MAS CYL PRS 1	Master cylinder pressure sensor 1 reading / min.: 0 V, max.: 5 V	When brake pedal is released : 0.3 to 0.9 V

(d) Check that the brake fluid pressure value of the master cylinder pressure sensor indicated on the intelligent tester, changes when the brake pedal is depressed.

OK:

Brake fluid pressure value should change.

NG → **Go to step 2**

OK

REPLACE ABS AND TRACTION ACTUATOR ASSEMBLY

2	INSPECT SKID CONTROL ECU (STP TERMINAL)

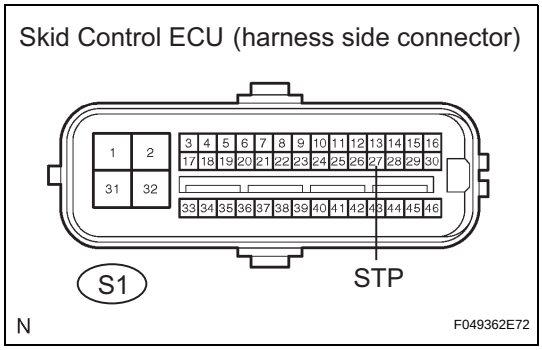

(a) Disconnect the skid control ECU connector.
(b) Measure the voltage according to the value(s) in the table below.

Voltage

Tester Connection	Switch Condition	Specified Condition
S1-27 (STP) - Body ground	Brake pedal depressed	8 to 14 V
S1-27 (STP) - Body ground	Brake pedal released	Below 1 V

NG → **CHECK AND REPLACE STOP LIGHT SWITCH CIRCUIT**

OK

REPLACE ABS AND TRACTION ACTUATOR ASSEMBLY